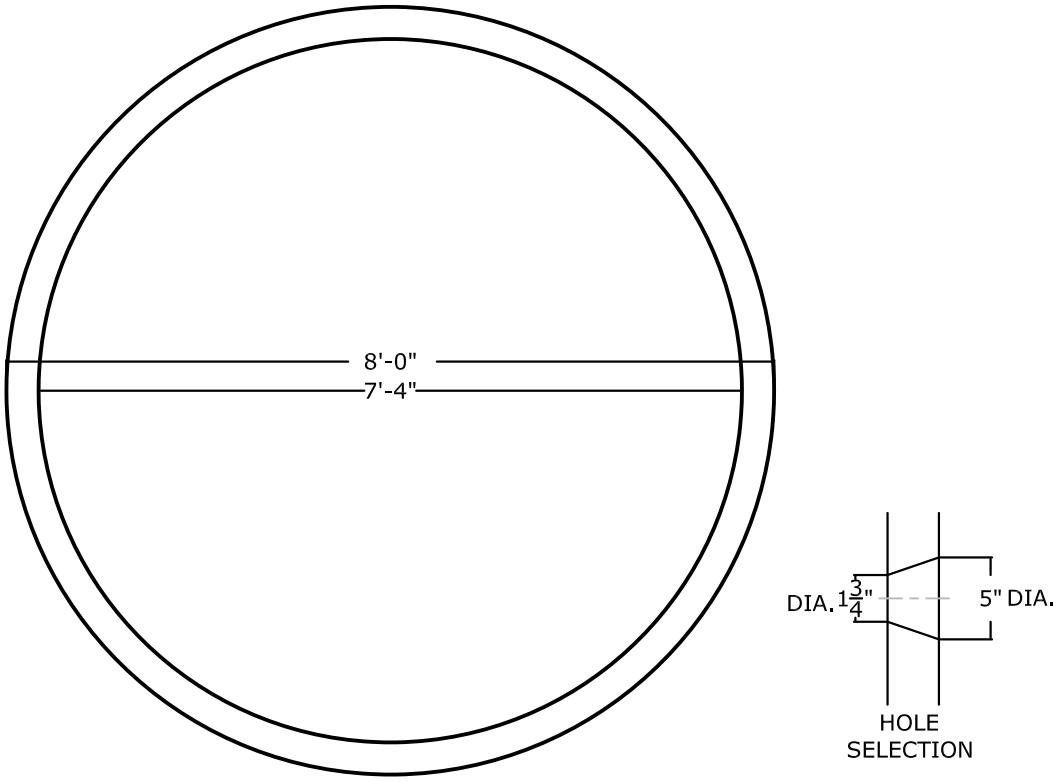

PLAN VIEW

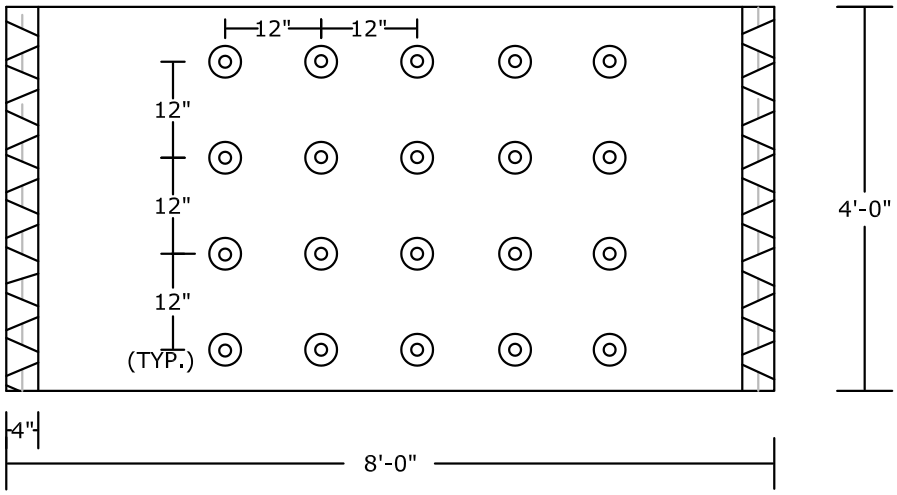

SECTION VIEW

NOTES:
- HS-20 LOAD RATED
- CONCRETE 5,000 PSI @ 28 DAYS
- REINFORCING: DETAILS FURNISHED UP REQUEST
- CAPACITY: 1290 GALLONS/ 172 CUBIC FEET
- WEIGHT: 5,000 LBS.+/-

PEERLESS CONCRETE PRODUCTS CO. SINCE 1959	246 Main Street Butler, NJ 07405 973.838.3060p
sales@peerlessconcrete.com	www.peerlessconcrete.com
4'-0" HI x 8'-0" DIA. SEEPAGE RING	
CUSTOMER:	
PROJECT:	**B-18**
SCALE:N.T.S. / DATE: 12/2023 / EST#:	